Spherical Radial Ball Bearing
Eccentric Locking Collar

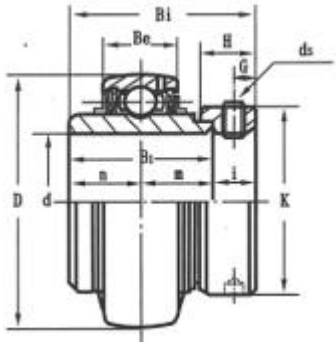

Bearing No.	Shaft Dia.		Dimensions (mm/inch)								Load Rating	
	mm	inch	D	Bi	Be	n	k	H	G	ds	Cr (KN)	Cor (KN)
NA 204	20		47	43.5	17	17	33.3	13.5	5	M6x0.75	9.88	6.18
NA 204-12		3/4								1/4-28(UNF)		
NA 205	25		52	44.3	17	17.4	38.1	13.5	5	M6x0.75	10.8	6.95
NA 205-14		7/8								1/4-28(UNF)		
NA 205-15		15/16										
NA 205-16		1										
NA 206	30		62	48.3	19	18.2	44.5	15.9	6	M8x1	15.0	10.0
NA 206-17		1-1/16								5/16-24(UNF)		
NA 206-18		1-1/8										
NA 206-19		1-3/16										
NA 207	35		72	51.1	20	18.8	55.6	17.5	6.5	M8x1	19.8	13.5
NA 207-20		1-1/4								5/16-24(UNF)		
NA 207-21		1-5/16										
NA 207-22		1-3/8										
NA 207-23		1-7/16										
NA 208	40		80	56.3	21	21.4	60.3	18.3	6.5	M8x1	22.8	15.8
NA 208-24		1-1/2								5/16-24(UNF)		
NA 208-25		1-9/16										
NA 209	45		85	56.3	22	21.4	63.5	8.3	6.5	M8x1	24.5	17.5
NA 209-26		1-5/8								5/16-24(UNF)		
NA 209-27		1-11/16										
NA 209-28		1-3/4										
NA 210	50		90	62.7	23	24.6	69.9	18.3	6.5	M8x1	27.0	19.8
NA 210-30		1-7/8								5/16-24(UNF)		
NA 210-31		1-15/16										
NA 211	55		100	71.4	24	27.7	76.2	20.8	8	M10x1.25	33.5	25.0
NA 211-32		2								3/8-24(UNF)		
NA 211-34		2-1/8										
NA 211-35		1-3/16										
NA 212	60		110	77.8	26	30.9	84.2	22.2	8	M10x1.25	36.8	27.8
NA 212-36		2-1/4								3/8-24(UNF)		
NA 212-38		2-3/8										
NA 212-39		2-7/16										
NA 213	65		120	85.7	27	34.1	86	23.5	8.5	M10x1.25	44.0	34.0
NA 213-40		2-1/2								3/8-24(UNF)		
NA 214	70		125	85.7	29	34.1	90	23.5	8.5	M10x1.25	46.8	37.5
NA 214-44		2-3/4								3/8-24(UNF)		
NA 215	75		130	92.1	30	37.3	102	23.5	8.5	M10x1.25	50.8	41.2
NA 215-47		2-15/16								3/8-24(UNF)		
NA 215-48		3										